POWERTEC®

P-LP19A

Manual

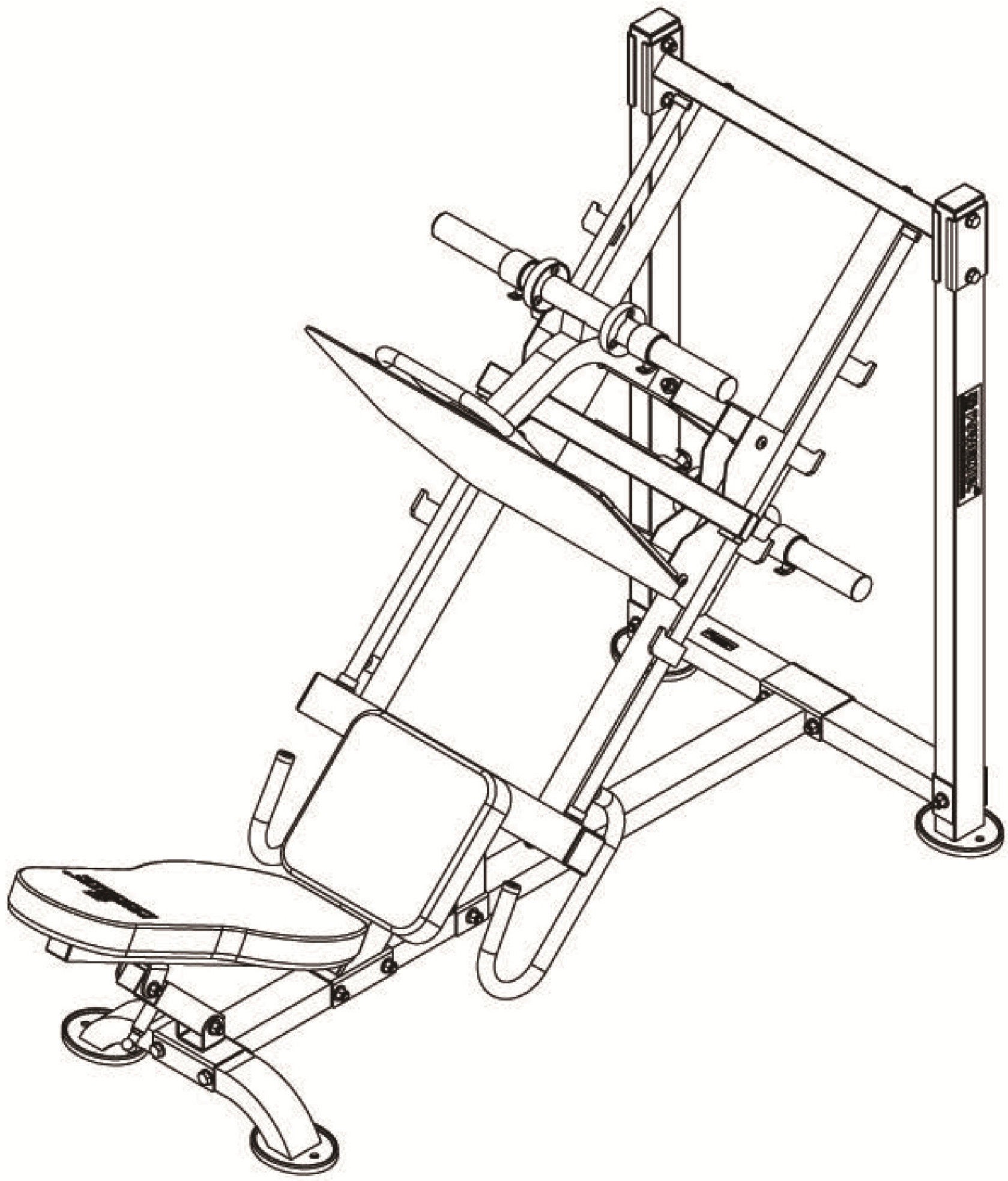

LEG PRESS

Thank you for purchasing your new Powertec equipment.
To maximize the use of this Equipment, please take a moment to study, understand and familiarize with the assembly instructions and follow the sequence of steps as provided in the manual.

Because of our products unique features, this manual was created to provide you with information on how to assemble and properly maintain your equipment.

Table of Contents

Introduction and Weight Capacities..... 2
Safety Instructions, Warnings and Cautions 3
Maintenance Tips..... 4
Tools Required for Assembly..... 5
Hardware List..... 6
Parts List..... 7
Exploded Diagram..... 8
Assembly Steps..... 9-11
Featured Exercises..... 12
Warranty Certificate..... 13
Warranty Registration Card..... 14

POWERTEC®

P-LP19A
Leg Press

Weight Capacity

1,000 Lbs.

Bench Weight Capacity

700 Lbs.

Featured Exercise

Leg Press

Recommended Strength Classic Systems

L-SC16	**Levergym Squat Calf**	**L-CDA+16**	**Levergym Chin/Dip Assist**
P-HC16	**Dual Hyperextension Crunch**	**P-BT16**	**Basic Trainer**
P-LM16	**Powertec Lat Machine**		

SAFETY INSTRUCTIONS, WARNINGS AND CAUTIONS

It is recommended that users of this equipment receive a thorough medical exam before commencing any exercise program. This is especially important if you have never Exercised and or are over the age of 35, are pregnant or suffer from any health issues.

Read All Warnings and Cautions on this Manual and on the Product

This product should only be used after a thorough review of the Owner's Manual.

Keep children away from the product when in use.

Set up and operate the product on a solid level surface.

Do not set up the product on loose rugs or uneven surfaces.

Make sure adequate space is available to exercise and move around the product.

Inspect product before and after each use, inspect for worn out or loose parts, repair or replace as needed.

This equipment meets industry safety standards for stability when used for the intended exercise. Do not allow straps, resistance bands or other means to be attached to the framework of this equipment to perform stretching or body weight exercises as it can result to equipment instability and lead to serious injuries.

Always choose a workout that best fits your needs, physical strength and flexibility Levels, know your limits and your product limits and train within them.

Always wear proper footwear with nonskid rubber soles such, running, walking or Cross training shoes that fit well and provide support.

Do not exercise bare foot or in socks.

Always use common sense when exercising.

MAINTENANCE

The safety and performance of this product can be maintained only if it is examined regularly for damage and normal wear.
Examine the equipment before each use for damage and wear. Replace damaged and worn components immediately or put the equipment out of use until repaired.

Inspect Daily / Before Each Use!
Inspect system. Make sure it is in good condition and operates smoothly.
If you find damage, **DO NOT USE**. Contact your authorized Powertec dealer or Powertec Customer Service Center for assistance.

Inspect Daily / After Each Use!
Clean system with a clean, dry cloth. Use a mild detergent or spray on upholstery.
Do Not use cleansers containing enzymes.

Inspect Weekly!
Clean your system fully with a clean and ammonia based cleaner.
Touch up any scratches with touch-up paint to prevent rust, if necessary.

Inspect Monthly!
Examine the frame for signs of cracking or permanent bending. Do not use the equipment if you see this. Contact Powertec Customer Service Immediately.
If you have any questions on the correct use or maintenance of this equipment, call your authorized distributor or Powertec Customer Service at 800-250-6665

Our Customer Service Mission:

"Committed to Stronger Lives"

By providing friendly and understanding service.

Tools Required for Assembly

M6 Allen Wrench

8" Adjustable Wrench

Wrenches
13 mm = 1/2"
19 mm = 3/4"
21 mm = 13/16"

Helpful Tips

- **Fill out and mail the limited warranty card**. The warranty card is found on the back cover of this guide.
- **Set up the unit on a solid, flat surface**. A smooth, flat surface under the unit helps keep it level.
- **Provide ample space around the machine**. Open space around the machine allows for easier access.
- **Insert all bolts in the same direction**. For aesthetic purposes, insert all the bolts in the same direction unless specified (in text or illustrations) to do otherwise.
- **Leave room for adjustments.** Tighten fasteners (such as bolts, nuts, and screws), so the unit is stable, but leave room for adjustments. **Do not** fully tighten fasteners until instructed (in the steps) to do so.

HARDWARE LIST

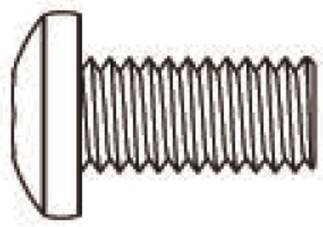

NO.21 3/8" x 3/4" 10 PCS

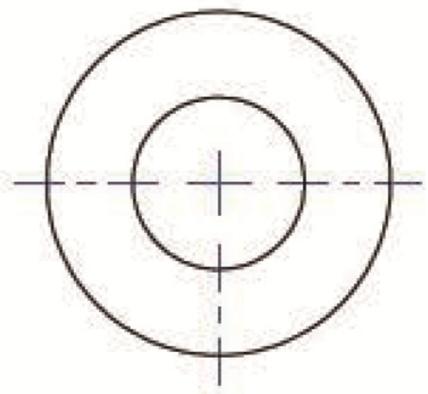

NO.27 1/2" 42 PCS

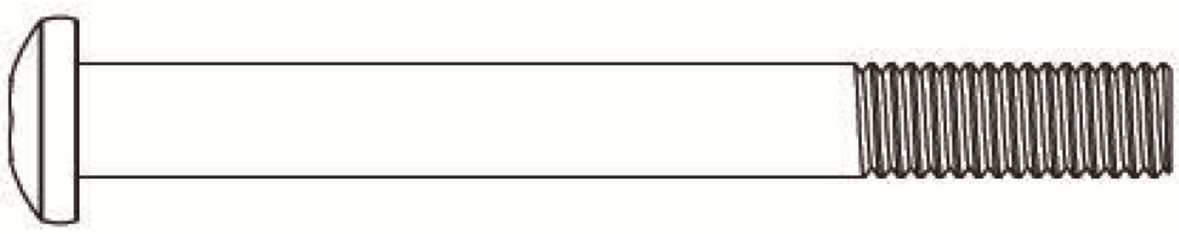

NO.22 3/8"x 3 1/2" 2 PCS

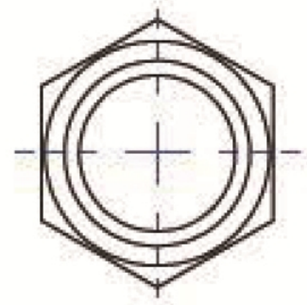
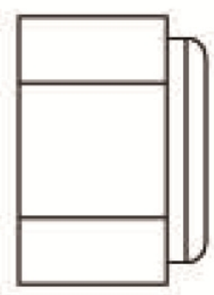

NO.28 1/2" 22 PCS

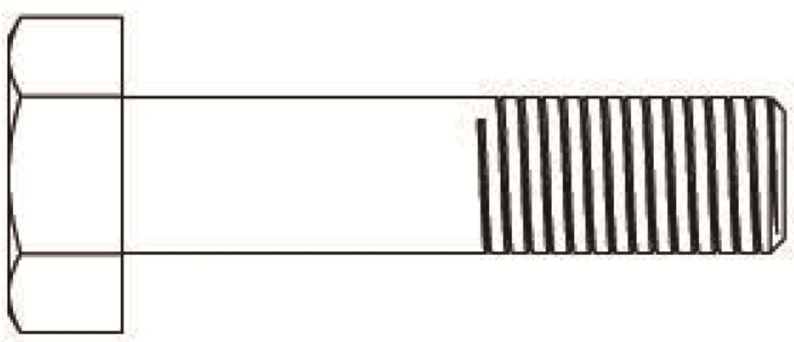
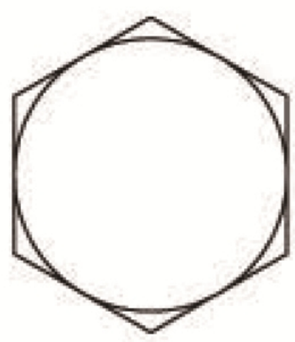

NO.23 1/2"x 2 1/8" 4PCS

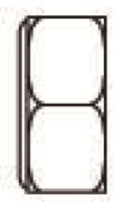

NO.32 3/8" 12 PCS

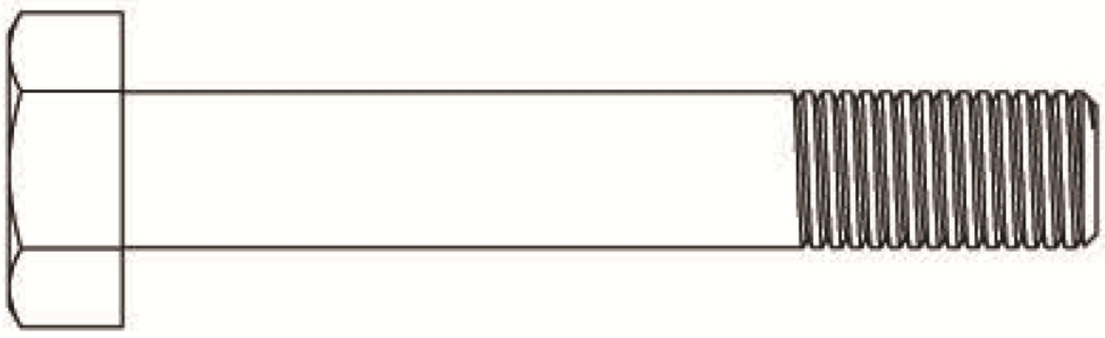

NO.25 1/2"x3 1/8" 4PCS

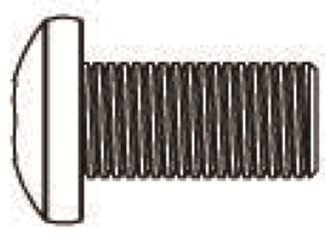

NO.30 3/8"x3/4 GR8 12PCS

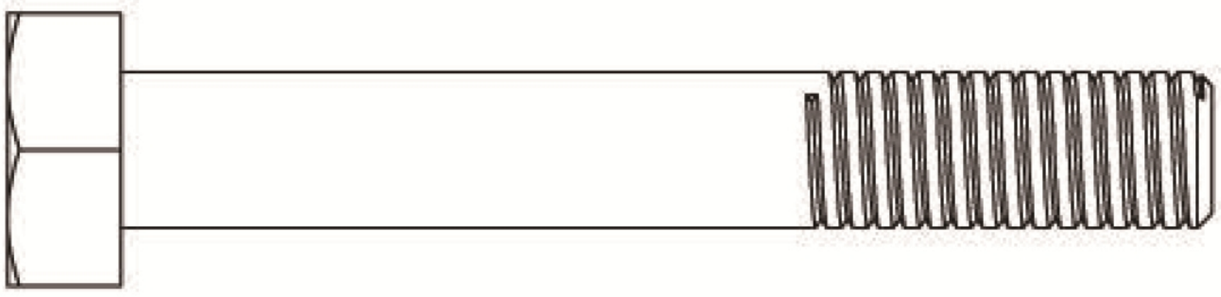

NO.26 1/2"x3 1/2" 3PCS

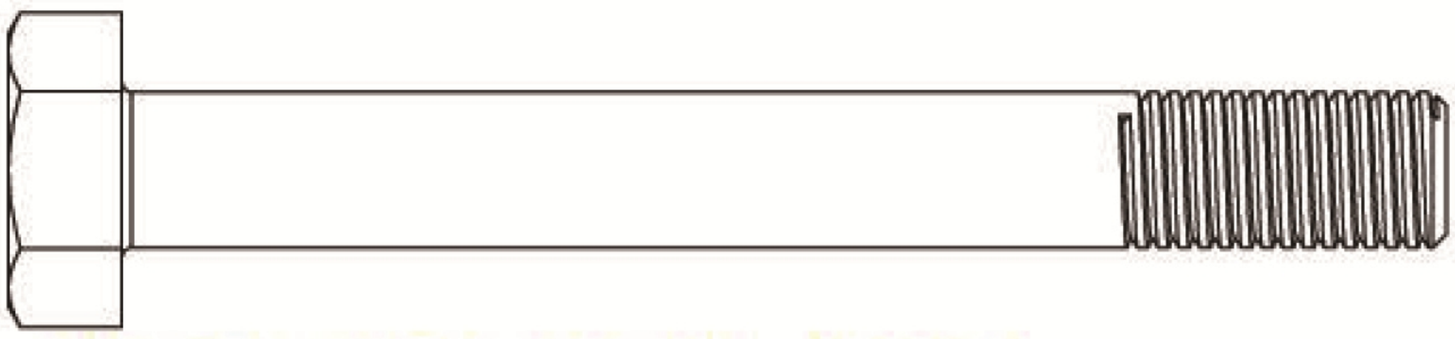

NO.24 1/2"x4 1/8" 9 PCS

POWERTEC®

P-LP19A

LEG PRESS

PART LIST

Part#	Description	Qty
1	U Base tube	1
2	Linkage tube	1
3	Seat support tube	1
4	Rear upright	2
5	Top linkage tube	1
6	Slide tube	2
7	Safety bar-R	1
8	Safety bar-L	1
9	Horizontal tube	1
10	Footplate support tube	1
11	Footplate	1
12	Weight support tube-UP	1
13	Weight support tube-DOWN	1
14	Backrest support tube	1
15	Adjust tube	1
16	Fixed tube	1
17	Weight horn	4
18	Linkage plate	2
19	Backrest pad	1
20	Seat pad	1
21	Hex bolt 3/8"x 3/4"	10
22	Hex bolt 3/8"x 3 1/2"	2
23	Half thread hex bolt 1/2"x 2 1/8"	4
24	Half thread hex bolt 1/2"x 4 1/4"	9
25	Half thread hex bolt 1/2"x 3 1/8"	4
26	Half thread hex bolt 1/2"x 3 1/2"	3
27	Washer	42
28	Nylon nut 1/2"	22
29	Collar	4
30	Hex bolt 3/8"x 3/4"(GR8)	12
31	Rubber Bumper	4
32	Nylon nut 3/8"	12

POWERTEC®

P-LP19A

LEG PRESS

EXPLODED DIAGRAM

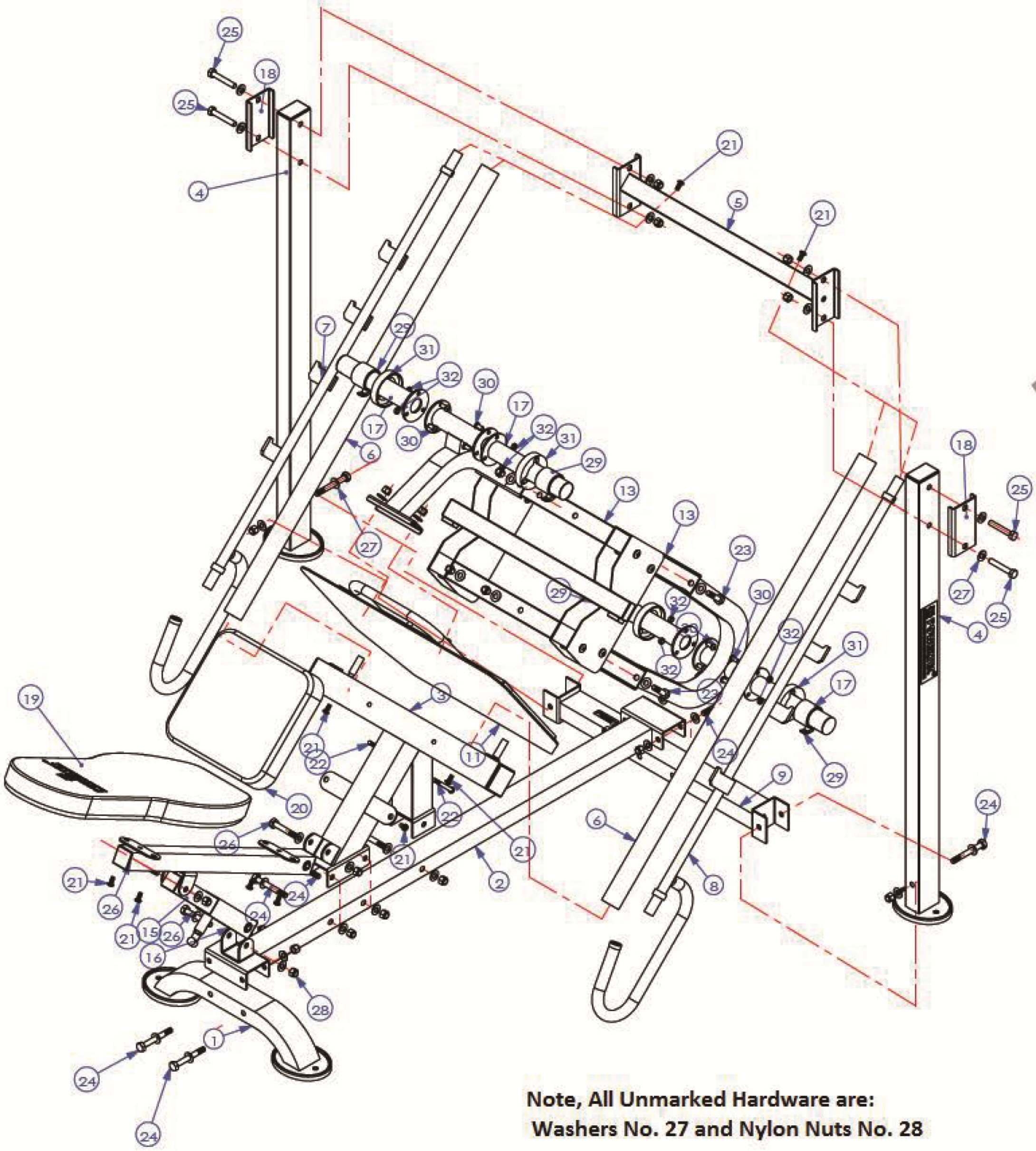

Note, All Unmarked Hardware are:
Washers No. 27 and Nylon Nuts No. 28

P-LP19A

LEG PRESS

ASSEMBLY ONE

POWERTEC®

Step 1

Install Linkage Tube No.2 to Base Tube No.1 using Bolts No.24, Washers No.27 and Nut No.28, Install Linkage Tube No. 2 to Horizontal Tube No. 9 using Bolts No. 24, Washers No. 27 and Nut No. 28

Step 2

Install Rear Uprights Tube No. 4 to Horizontal Tube No.9 using Bolts No.24, Washers No.27 and Nuts No.28

Step 3

Install Seat Support Tube No.3 to Linkage Tube No.2 using Bolt No.24, Washers No.27 and Nut No.28

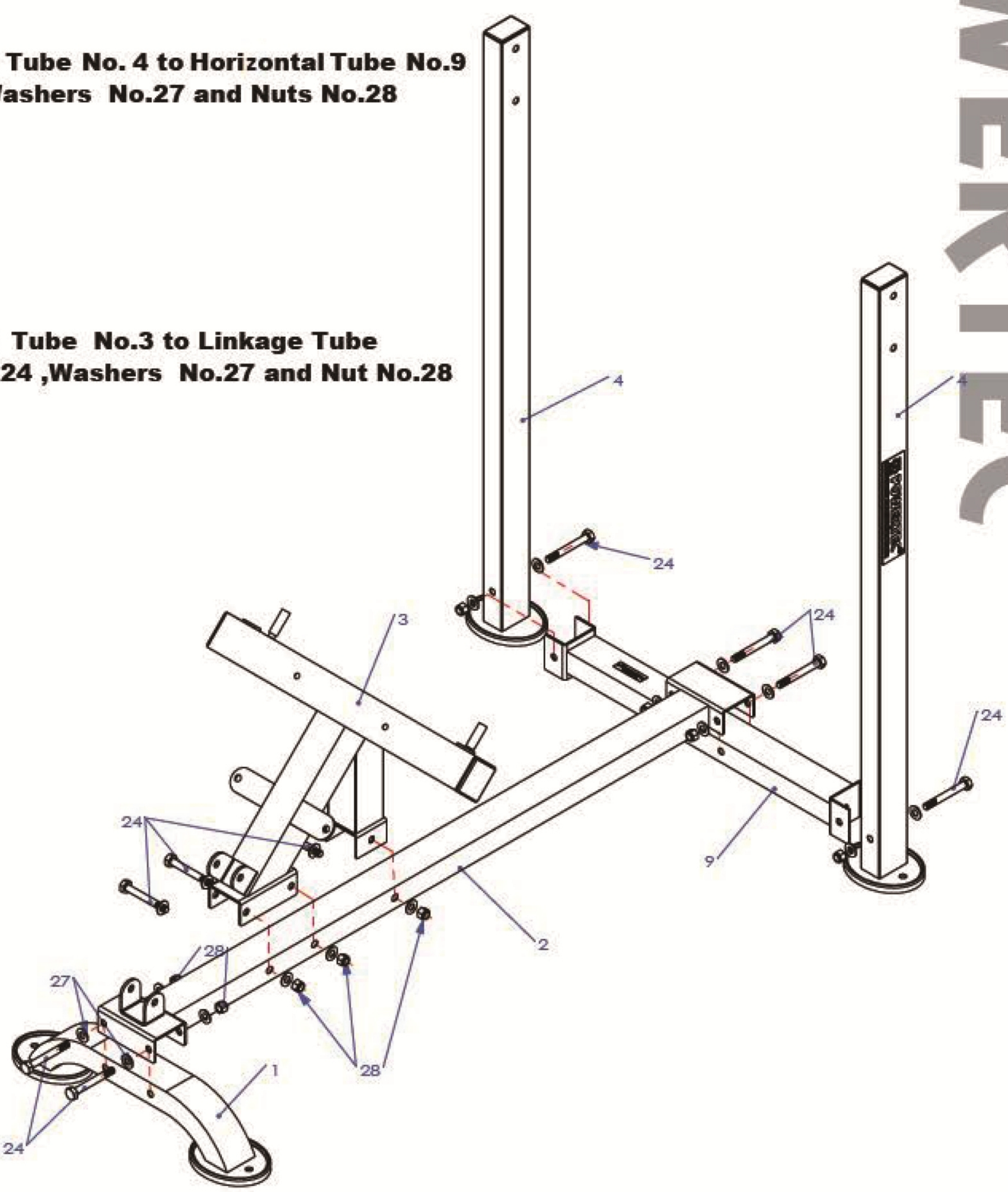

Do Not Fully Tighten Until Assembly Has Been Completed.

P-LP19A

LEG PRESS

ASSEMBLY TWO

POWERTEC®

Step 1

Install Linkage Tube No.5 to Upright Tube No.4 Attach Linkage Plate No.18, using Bolts No. 24 Washers No. 27 and Nut No.28, Install Linkage Tube No. 2 to Horizontal Tube No. 9 using Bolts No. 24 ,Washers No. 27 and Nut No.28

Step 2

Install Slide Tubes No.6 ,SafetyBars No.7 and No.8 onto Backrest Support Tube No. 3,secure with Bolts No.21 and Fully Tighten.

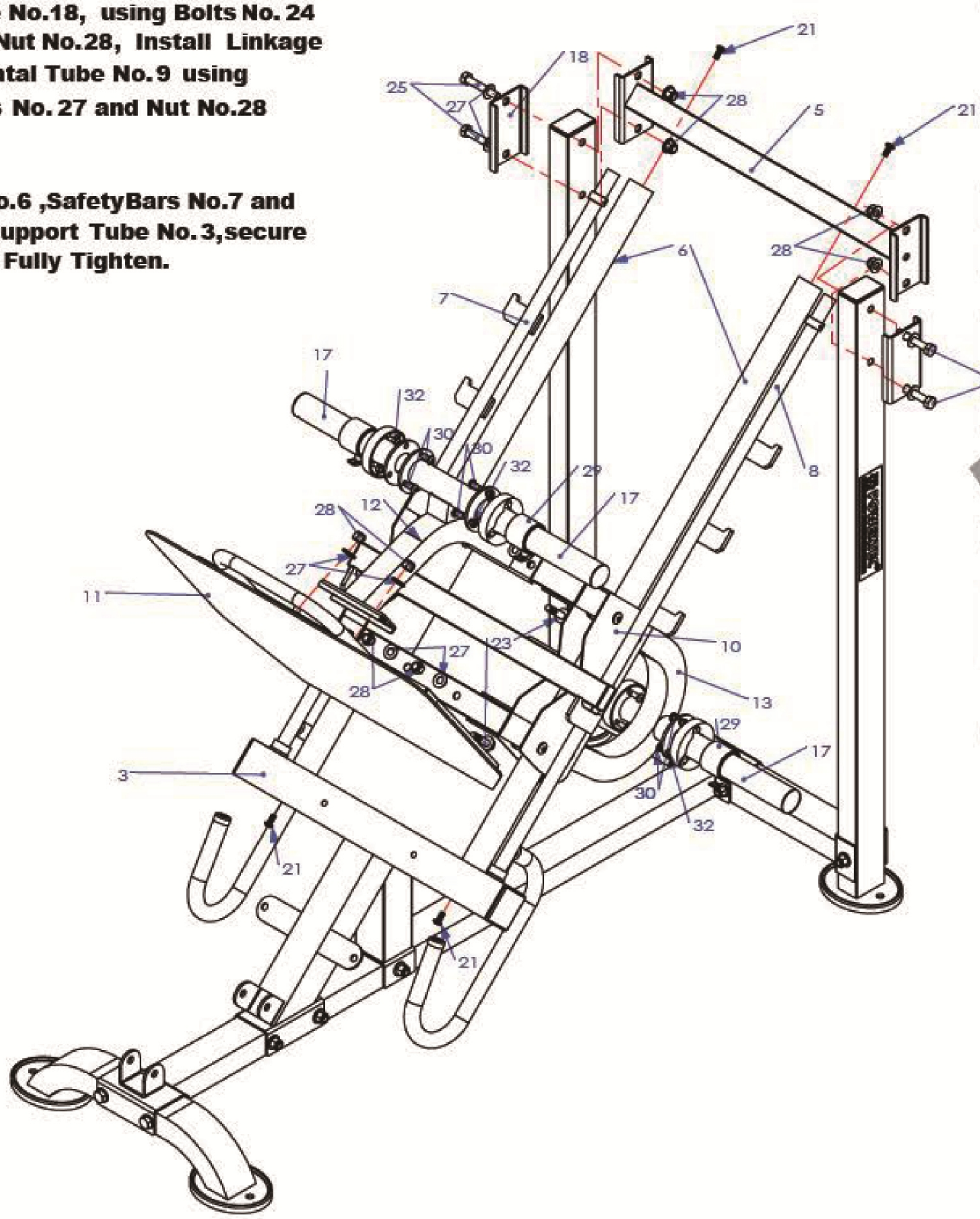

Step 3

Install Foot Plate Support Tube No.10 onto No.6 and No.7 and 8.

Secure Linkage Tube No.5 and Slide Tubes No.6 with Bolts No.21 and Fully Tighten.

Step 4

Install Foot Plate No.11 and Weight Support Tube No.12 to Weight Support Tube No.10, Attach Weight Support Tube No.13 to No.10, secureNo.11 , No.12 and No.13 to No.10 with Bolts No.23 Washers No.27 and Nuts No.28.

P-LP19A

LEG PRESS

ASSEMBLY THREE

POWERTEC®

Step 1

Install Backrest Support Tube No.14 to Backrest Support Tube No.3, Adjust Tube No.15 and Fixed Tube No.16 to Linkage tube No.2 using Bolts No.26, Washers No.27 and Nuts No.28

Step 2

Install Backrest Pad No.19 to Backrest Tube No.14 and Seat Pad to Linkage Tube No. 3 using Bolts No.21 and No.22

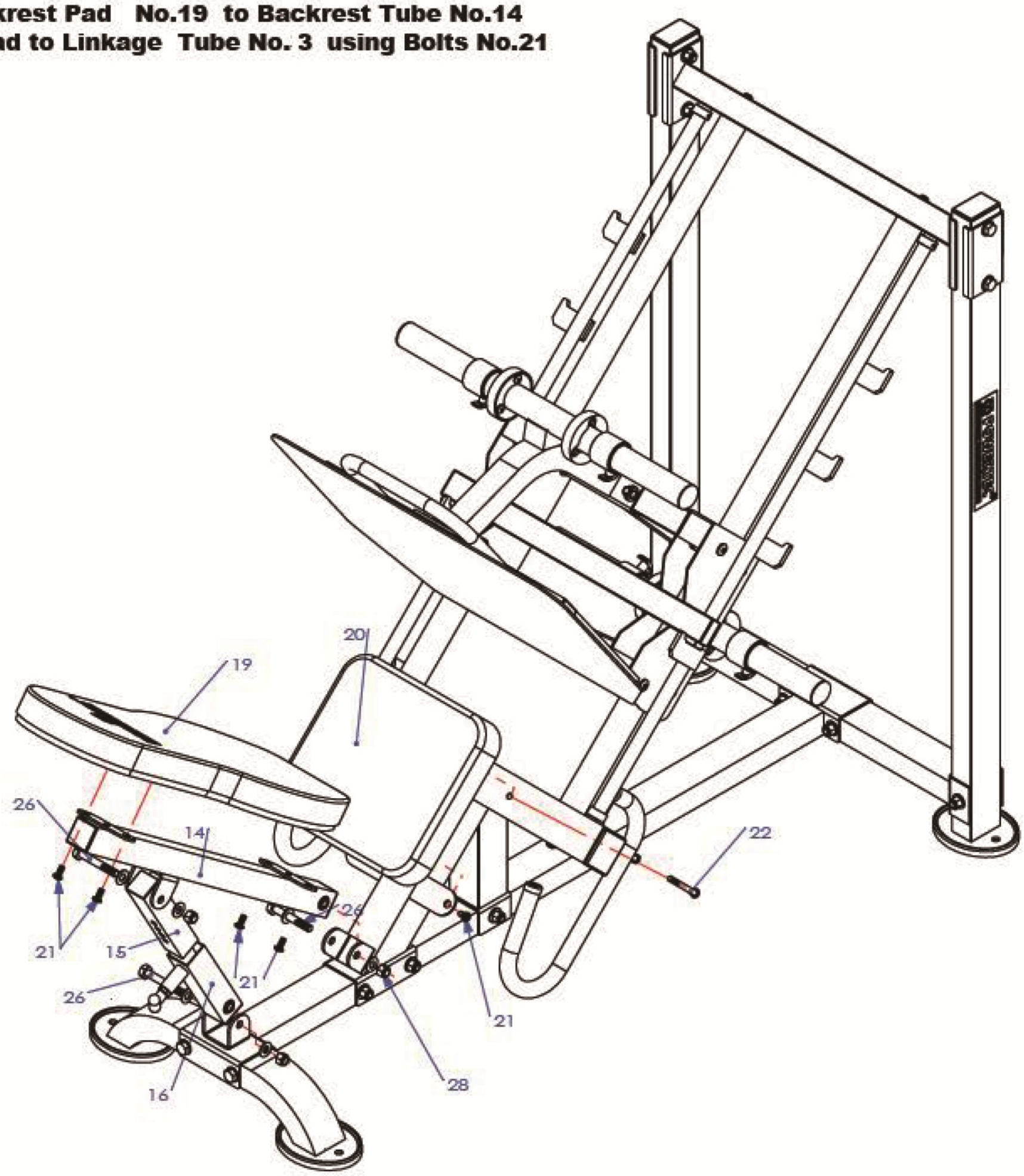

P-LP19A

LEG PRESS

POWERTEC

COMMITTED TO STRONGER LIVES

Exercise List

·Leg Press ·Calf Raises

YOUTUBE

"Check out our Youtube channel for variety of exercises they can do on the machine"

www.youtube.com/PowertecGymEquipment

Scan me

Featured Exercises

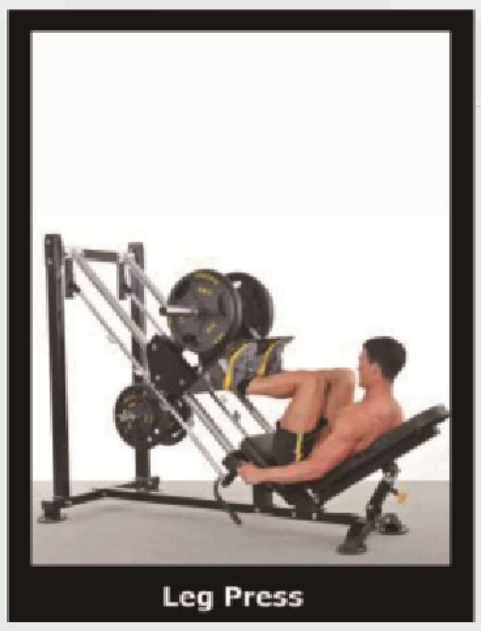

Leg Press

Staring Position:
Sit comfortably on the seat and grab the handles on both sides.
Place your feet flat on the foot plate about hip width apart.
Release the Safety Bar.

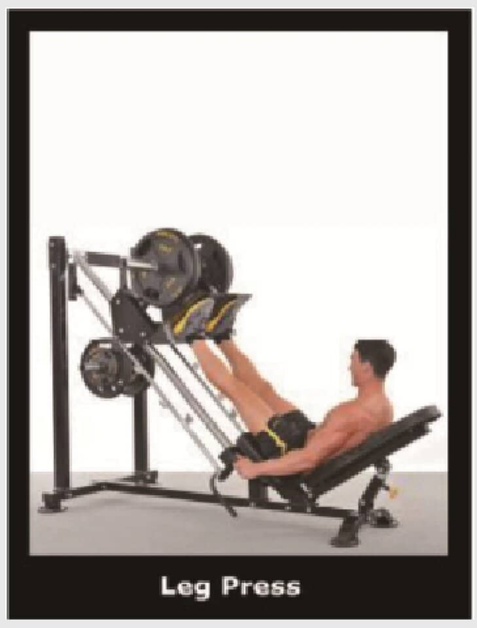

Leg Press

Push the weight up by straightening your legs, stopping before Your knees lock.

Pause briefly before slowly returning to the starting position.

Optional Accessories

with the Pec Fly Accessory, Leg Press Accessory, Leg Lift Accessory, Lat Tower Accessory, Dip Accessory, and Accessory Rack

Weight Rack

WARRANTY

Serial No.

Thank you for purchasing one of Powertec's products.

Powertec warrants that the Product you have purchased is free from defects in materials and workmanship.

Powertec offers a Lifetime Warranty on Structural Frame.(Excludes Surface Finish).
5 year warranty on Moving Frames (Press Arms and other unspecified moving components).
Two year warranty on Components (Bearings, Locking Pins, Pulleys, Cables, Slide Rods).
One year warranty on Pads, Grips and other unspecified parts.

- All parts are shipped free of charge for first 90 days of date of purchase.
- Warranty is to original purchaser only (excluding dealer). Warranty is not Transferable in the event you sell the product.
- Warranty claims are subject to inspection and are voided if equipment shows Signs of abuse or alterations made other than the ones recommended by Powertec.
- Missing parts must be reported within 30 days from receipt of unit(s).
- Proof of purchase is required; your sales receipt must show date of purchase.
- For more information on the warranty or to obtain warranty service, please contact The appropriate Powertec Customer Service Department in the USA or Europe.

Powertec Inc. USA
6301 Alondra Blvd.,
Paramount, CA 90723– USA

Phone: (800) 250-6665
E-mail: service@powertecfitness.com

Powertec Europe
2 rue d'Aquitaine
68390 Sausheim – France

Phone: + 33(0) 6 43 592 803
E-mail: contact@powertec-europe.fr

Thank you for giving us the opportunity to fulfill your strength and fitness needs.

POWERTEC®

Customer Warranty Information Sheet

Last Name: _____ First Name:_____

Company:_____

Street Address:_____

City:_____ State: _____ Zip Code: _____

Daytime Telephone No:_____ Alternate Telephone No. _____

E-Mail:_____Date of Purchase: _____ Purchase Price: _____

Dealer Name and Address: _____

Model Name & Code: _____ Optional: Male / Female: ____ Age: ___ Occupation: _____

POWERTEC IS NOT LIABLE IF THE TRAINER SHOULD INJURE THEMESEL VES WHILE USING POWERTEC EQUIPMENT OR WHILE PERFORMING THE TRAINING ROUTINE

POWERTEC®

COMMITED TO STRONGER LIVERS®

POWERTEC INC.
6301 Alondra Blvd.,
Paramount, CA 90723
USA
Phone:(800)250-6665

service@powertecfitness.com
www.powertecfitness.com

POWERTEC EUROPE
2 rue d'Aquitaine
68390 Sausheim – France

Phone: +33 (0)6 43 592 803
E-Mail: contact@Powertec-europe.fr

Return Warranty Registration Card to Appropiate Powertec Adress:

Place
Stamp
Here

Powertec®